1. CRANKCASE DINLI 904 ENGINE LIST

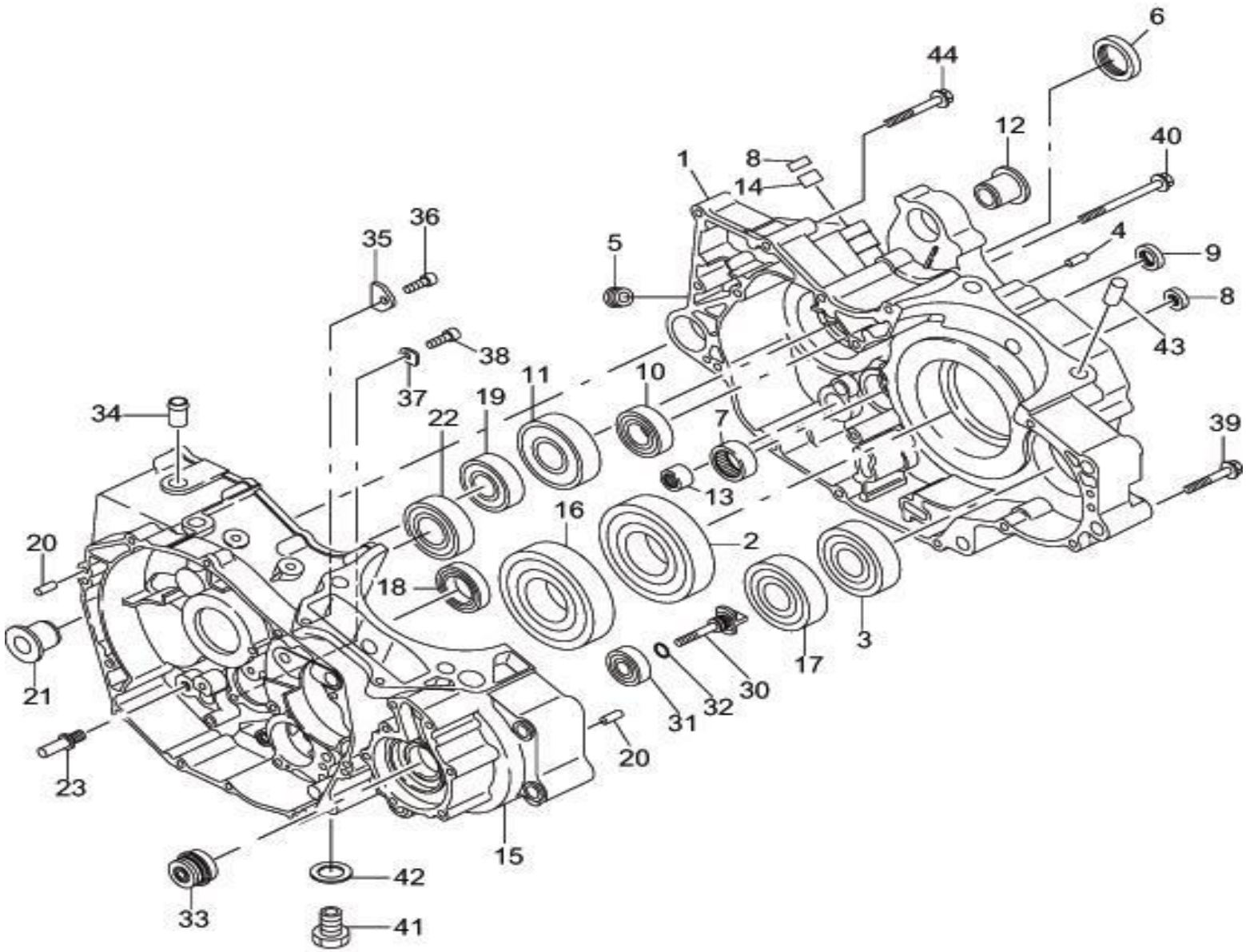

# 1. CRANKCASE

| Item | Part-No. | Part Name | Specification | Quantity |
|---|---|---|---|---|
| *1 | 290-10301-00 | CRANKCASE ASSY. | Incl. 2～23,30～40 | 1 |
| 2 | 060-03502-21 | BALL BEARING | 3TMB-6308 | 1 |
| 3 | 060-02501-70 | BALL BEARING | TMB305X77 C3 | 1 |
| 4 | 031-00600-10 | DOWEL PIN | | 2 |
| 5 | 235-15421-03 | BLIND PLUG | PT1/8 | 1 |
| 6 | 044-02500-70 | OIL SEAL | TB25X38X7 | 1 |
| 7 | 061-01300-00 | NEEDLE BEARING | HK2512 | 1 |
| 8 | 044-01200-30 | OIL SEAL | KC12X18X5 | 2 |
| 9 | 044-01300-20 | OIL SEAL | TC13X22X5 | 1 |
| 10 | 060-02001-50 | BALL BEARING | 6004LU | 1 |
| 11 | 060-02501-10 | BALL BEARING | 6305LU | 1 |
| 12 | 283-16401-03 | COLLAR | | 1 |
| 13 | 061-02500-10 | NEEDLE BEARING | HK1312 | 1 |
| 14 | 060-21200-10 | BEARING (RELEASE) | | 1 |
| 16 | 060-03502-21 | BALL BEARING | 3TM-6308 | 1 |
| 17 | 060-02501-70 | BALL BEARING | TMB305X77 C3 | 1 |
| 18 | 060-02501-20 | BALL BEARING | 6905 | 1 |
| 19 | 060-02000-20 | BALL BEARING | 6204 | 1 |
| 20 | 031-00600-10 | DOWEL PIN | | 4 |
| 21 | 283-16401-03 | COLLAR | | 1 |
| 22 | 060-02501-30 | BALL BEARING | TMB205 | 1 |
| 23 | 257-88901-03 | STOPPER PIN | | 1 |
| *30 | 283-55002-01 | WATER PUMP SHAFT COMP | Incl. 31,32 | 1 |

1. CRANKCASE

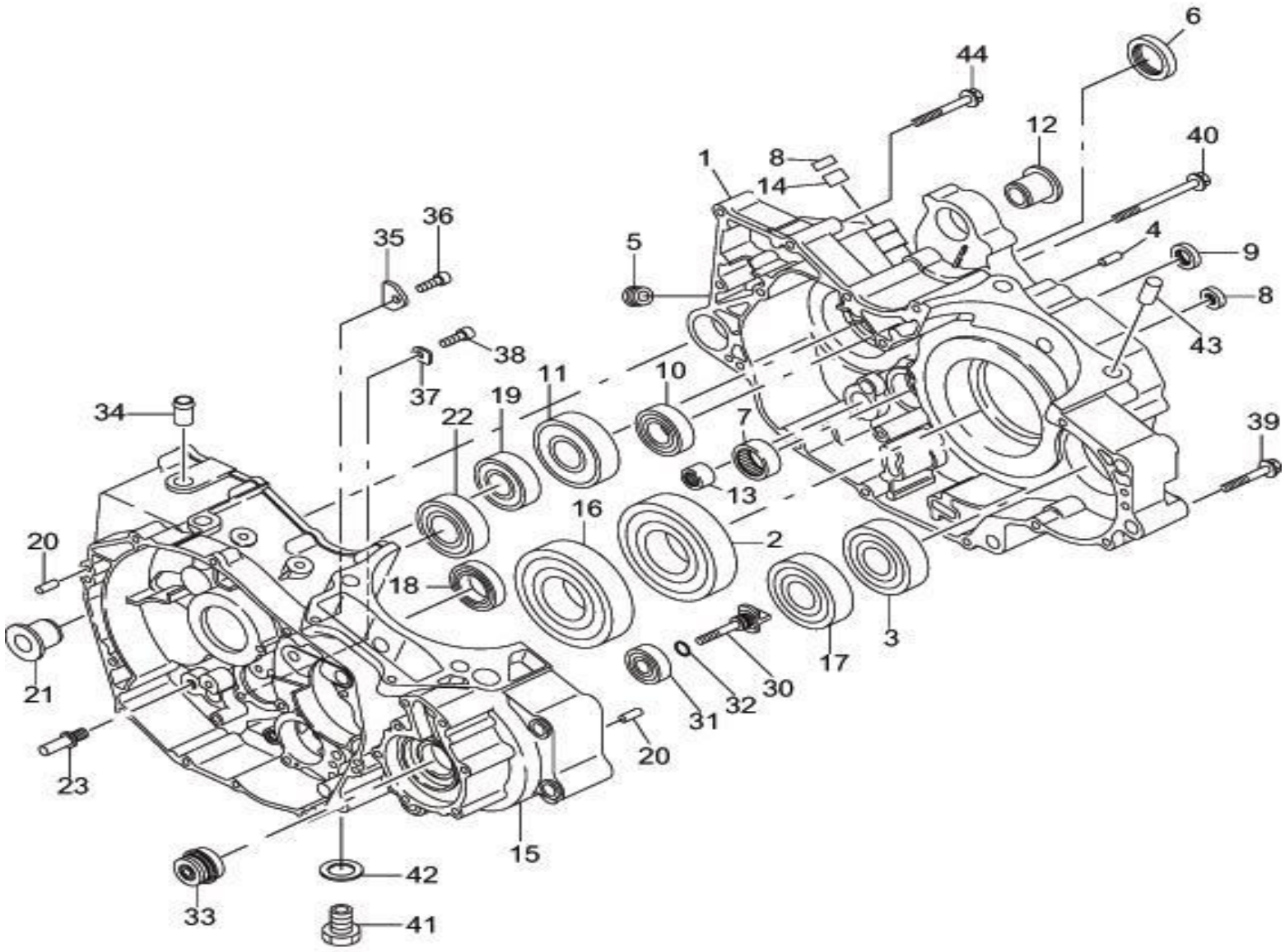
6
44
12
40
1
8
14
4
9
8
43
5
36
35
38
37
11
10
19
22
34
7
39
13
16
2
20
18
3
17
21
30
32
31
20
23
15
42
33
41

# 1. CRANKCASE

| Item | Part-No. | Part Name | Specification | Quantity |
|---|---|---|---|---|
| 31 | 060-01200-60 | BALL BEARING | 6201DU2 | 1 |
| 32 | 006-26100-90 | ″O″ RING | O-R8.8X1.9 | 1 |
| 33 | 257-56201-01 | MECHANICAL SEAL COMPL | WF58X13X1.8 | 1 |
| 34 | 132-97KA0-60 | PIPE-AIR BREATHER | | 1 |
| 35 | 283-15503-03 | STOPPER PLATE | | 1 |
| 36 | 011-90600-90 | BOLT (SOCKET HEAD) | M6×16mm | 1 |
| 37 | 283-15504-03 | STOPPER PLATE B | | 2 |
| 38 | 011-90600-50 | BOLT (SOCKET HEAD) | M6×12mm | 2 |
| 39 | 011-00605-20 | FLANGE BOLT | M6×40mm | 7 |
| 40 | 011-00605-30 | FLANGE BOLT | M6×75mm | 8 |
| 41 | 283-69301-13 | PLUG (MAGNETO) | | 1 |
| 42 | 021-11400-20 | GASKET | | 1 |
| 43 | 031-51500-10 | PIPE KNOCK | For M11 | 2 |
| 44 | 011-00605-40 | FLANGE BOLT | M6×50mm | 1 |

# 2. CYLINDER

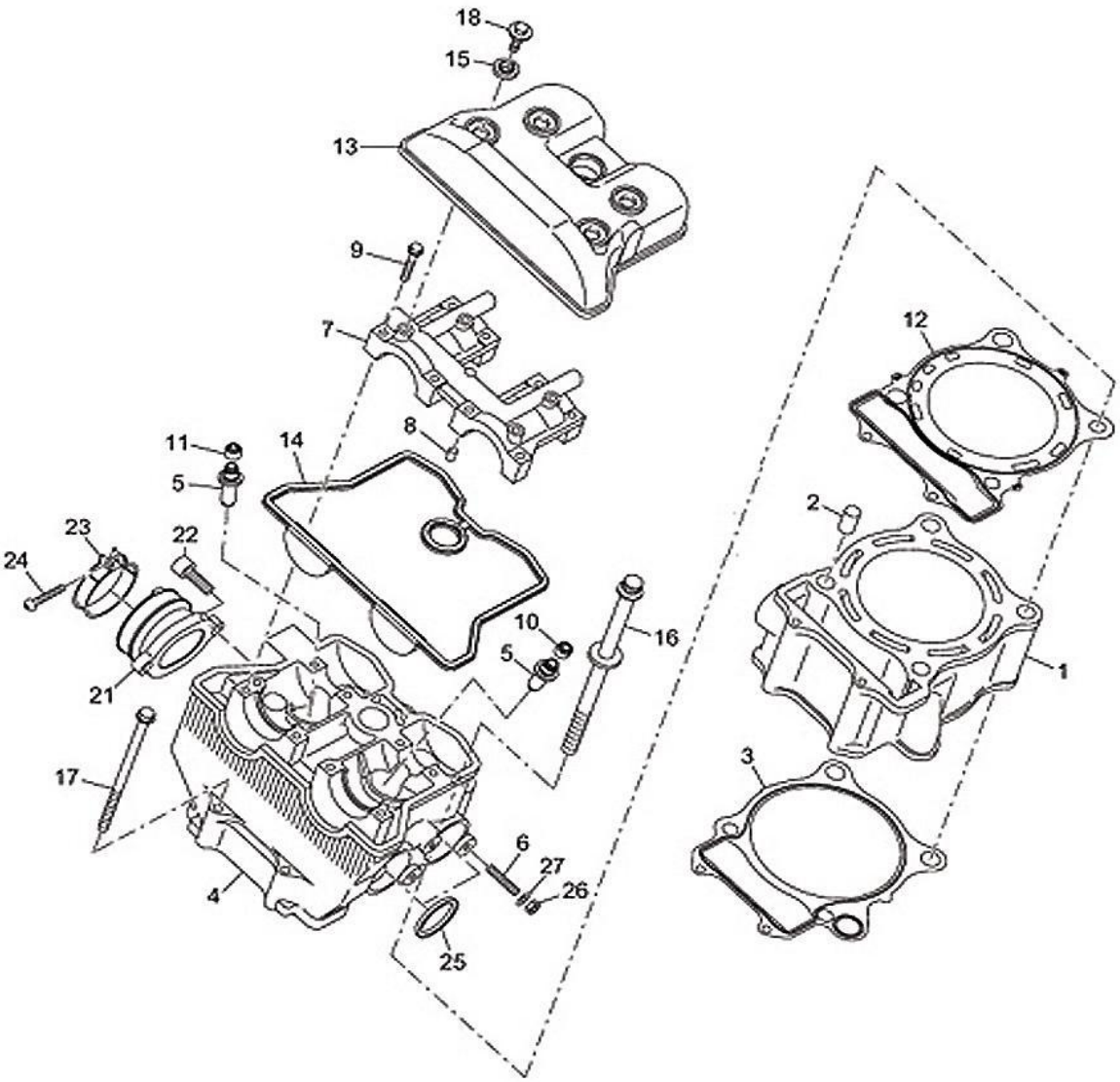

## 2. CYLINDER

| Item | Part-No. | Part Name | Specification | Quantity |
|---|---|---|---|---|
| 1 | 290-12401-01 | CYLINDER COMPL. | | 1 |
| 2 | 031-51500-10 | PIPE KNOCK | For M11 | 2 |
| 3 | 283-15201-13 | GASKET (CYLINDER) | | 1 |
| *4 | 290-13002-00 | CYLINDER HEAD ASSY. | Incl. 5～11 | 1 |
| 5 | 283-14202-03 | GUIDE VALVE | | 4 |
| 6 | 010-50804-01 | STUD | | 4 |
| 8 | 980-40081-10 | STRAIGHT PIN | For M6 | 2 |
| 9 | 011-00605-20 | FLAGNE BOLT | M6×40mm | 8 |
| 10 | 283-16001-03 | SEAL-VALVE | | 2 |
| 11 | 283-15901-03 | SEAL-INTAKE VALVE | | 2 |
| 12 | 290-15102-01 | GASKET COMPL.（HEAD） | | 1 |
| 13 | 290-36301-03 | HEAD COVER | | 1 |
| 14 | 283-36101-13 | ”O” RING (HEAD COVER) | | 1 |
| 15 | 283-36001-03 | RUBBER MOUNT | | 4 |
| 16 | 283-16201-03 | BOLT AND WASHER ASSY. | M11×198mm | 4 |
| 17 | 011-00604-10 | FLANGE BOLT | M6×140mm | 2 |
| 18 | 283-36201-03 | BOLT | M6×14mm | 4 |
| 21 | 283-65001-01 | ADAPTER COMPL. | | 1 |
| 22 | 011-90800-20 | BOLT(SOCKET HEAD) | M8×20mm | 2 |
| *23 | 283-65901-00 | BAND ASSY. (ADAPTER) | Incl. 24 | 1 |
| 24 | 004-31043-00 | SCREW, PANHEAD | M4×30mm | 1 |
| 25 | 283-36901-01 | GASKET COMPL. (EXHAUST) | | 2 |
| 26 | 017-20800-20 | NUT | | 4 |
| 27 | 003-20080-00 | SPRING WASHER | | 4 |

3. CRANKSHAFT & PISTON

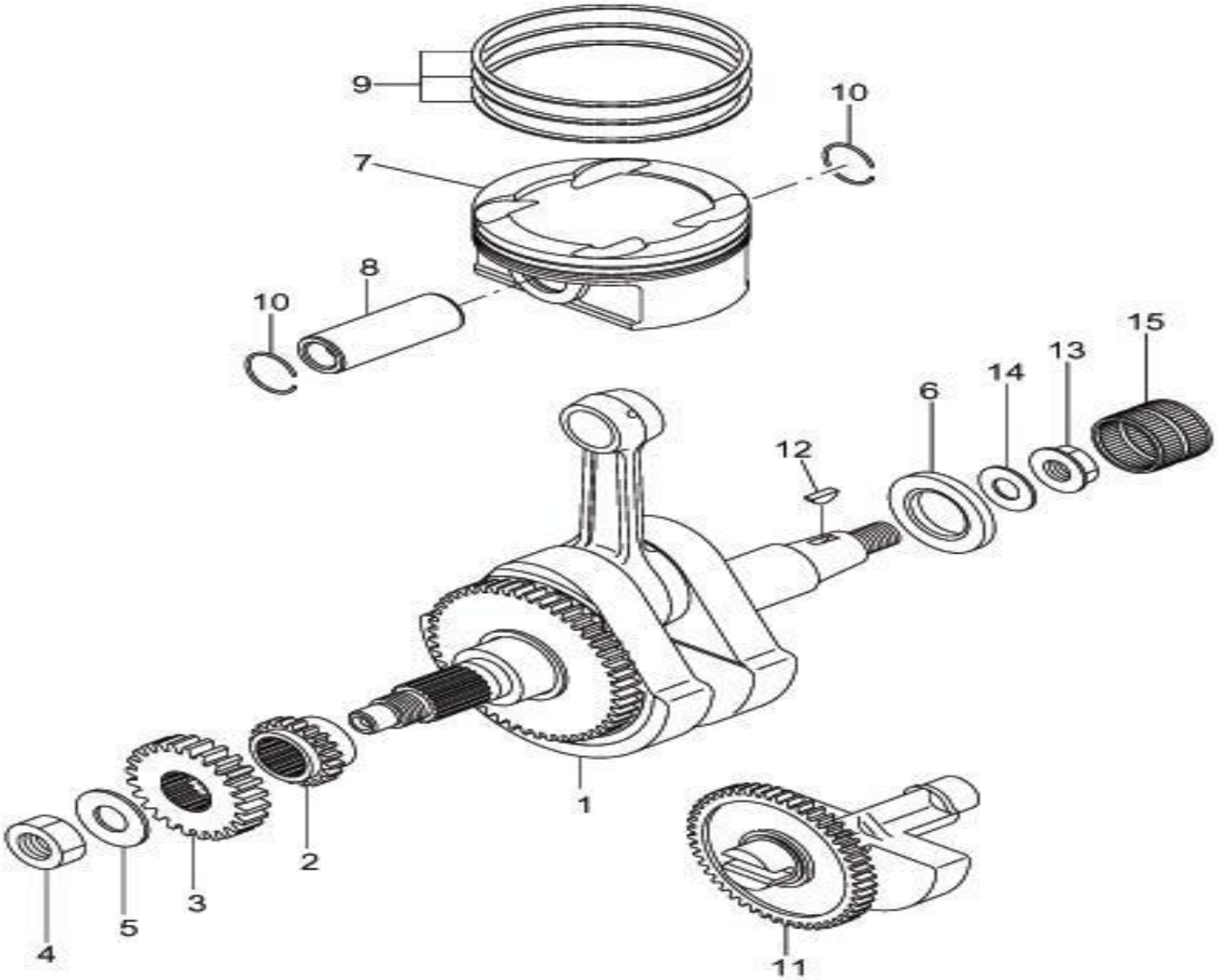

# 3. CRANKSHAFT & PISTON

| Item | Part-No. | Part Name | Specification | Quantity |
|---|---|---|---|---|
| 1 | 283-20301-00 | CRANKSHAFT ASSY. | | 1 |
| 2 | 283-35202-03 | CRANK SPROCKET | | 1 |
| 3 | 283-25003-03 | PRIMARY GEAR (DRIVE) | | 1 |
| 4 | 017-01800-50 | NUT | | 1 |
| 5 | 020-01800-40 | WASHER | | 1 |
| 6 | 283-26001-03 | SPACER | | 1 |
| *7 | 290-23401-07 | PISTON SET (STD) | Incl. 7,10 | 1 |
| 8 | 283-23301-03 | PISTON PIN | | 1 |
| 9 | 290-23501-07 | PISTON RING SET (STD) | | 1 |
| 10 | 056-52300-20 | CLIP | | 2 |
| 11 | 283-24105-01 | BALANCER SHAFT COMPL. | | 1 |
| 12 | 032-30400-70 | WOODRUFF KEY | | 1 |
| 13 | 018-01400-20 | FLANGE NUT | | 1 |
| 14 | 020-01400-30 | WASHER | | 1 |
| 15 | 283-76201-03 | NEEDLE BEARING | K30X35X26ZW | 1 |

# 4. INTAKE & EXHAUST

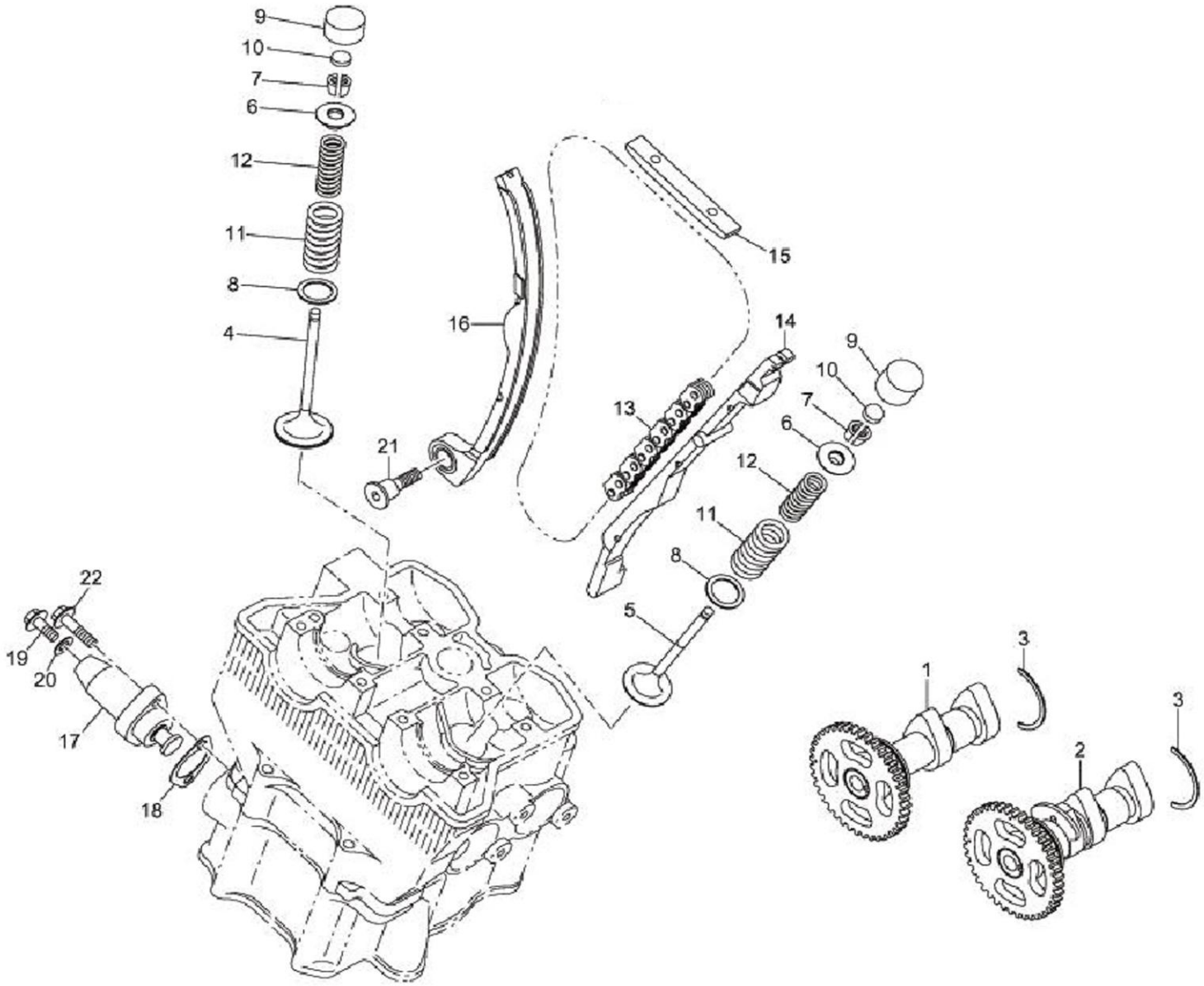

# 4. INTAKE & EXHAUST

| Item | Part-No. | Part Name | Specification | Quantity |
|---|---|---|---|---|
| 1 | 283-31601-01 | CAMSHAFT (IN) COMPL. | | 1 |
| 2 | 283-31602-11 | CAMSHAFT (EX) COMPL. | | 1 |
| 3 | 283-35601-03 | BEARING STOPPER | | 2 |
| 4 | 287-33401-03 | INTAKE VALVE | | 2 |
| 5 | 287-33501-03 | EXHAUST VALVE | | 2 |
| 6 | 283-33701-03 | SPRING RETAINER | | 4 |
| 7 | 132-10AA0-20 | COLLET-VALVE | | 8 |
| 8 | 283-35701-03 | SEAT (VALVE SPRING) | | 4 |
| 9 | 283-35801-03 | VALVE LIFTER | | 4 |
| 10 | 283-35901-03 | SHIM TAPPET | T=1.450 | 4 |
| 10 | 283-35902-03 | SHIM TAPPET | T=1.500 | 4 |
| 10 | 283-35903-03 | SHIM TAPPET | T=1.550 | 4 |
| 10 | 283-35904-03 | SHIM TAPPET | T=1.600 | 4 |
| 10 | 283-35905-03 | SHIM TAPPET | T=1.625 | 4 |
| 10 | 283-35906-03 | SHIM TAPPET | T=1.650 | 4 |
| 10 | 283-35907-03 | SHIM TAPPET | T=1.675 | 4 |
| 10 | 283-35908-03 | SHIM TAPPET | T=1.700 | 4 |
| 10 | 283-35909-03 | SHIM TAPPET | T=1.725 | 4 |
| 10 | 283-35910-03 | SHIM TAPPET | T=1.750 | 4 |
| 10 | 283-35911-03 | SHIM TAPPET | T=1.775 | 4 |
| 10 | 283-35912-03 | SHIM TAPPET | T=1.800 | 4 |
| 10 | 283-35913-03 | SHIM TAPPET | T=1.825 | 4 |
| 10 | 283-35914-03 | SHIM TAPPET | T=1.850 | 4 |
| 10 | 283-35915-03 | SHIM TAPPET | T=1.875 | 4 |
| 10 | 283-35916-03 | SHIM TAPPET | T=1.900 | 4 |

# 4. INTAKE & EXHAUST

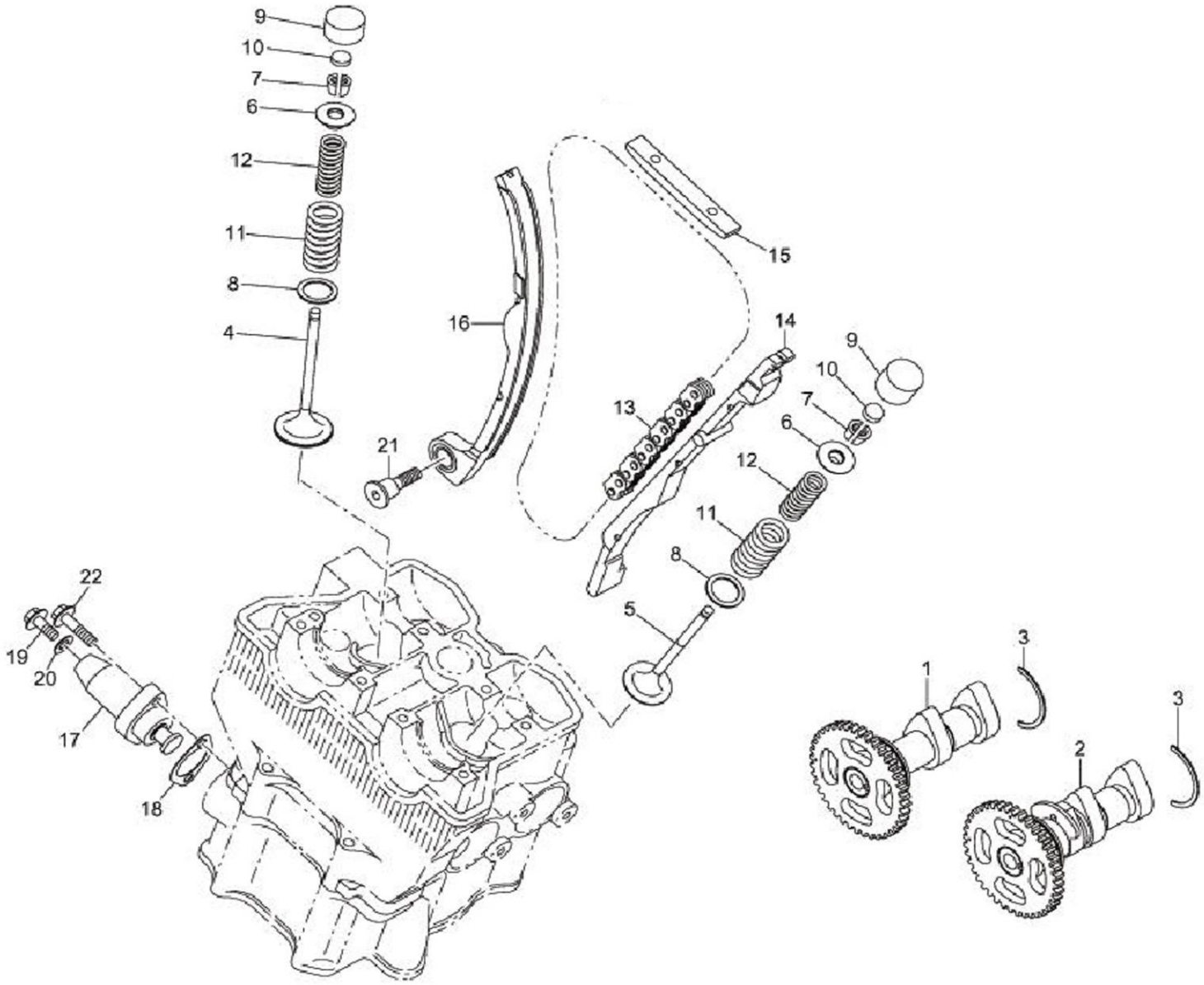

# 4. INTAKE & EXHAUST

| Item | Part-No. | Part Name | Specification | Quantity |
|---|---|---|---|---|
| 10 | 283-35917-03 | SHIM TAPPET | T=1.925 | 4 |
| 10 | 283-35918-03 | SHIM TAPPET | T=1.950 | 4 |
| 10 | 283-35919-03 | SHIM TAPPET | T=1.975 | 4 |
| 10 | 283-35920-03 | SHIM TAPPET | T=2.000 | 4 |
| 10 | 283-35921-03 | SHIM TAPPET | T=2.025 | 4 |
| 10 | 283-35922-03 | SHIM TAPPET | T=2.050 | 4 |
| 10 | 283-35923-03 | SHIM TAPPET | T=2.075 | 4 |
| 10 | 283-35924-03 | SHIM TAPPET | T=2.100 | 4 |
| 10 | 283-35925-03 | SHIM TAPPET | T=2.125 | 4 |
| 10 | 283-35926-03 | SHIM TAPPET | T=2.150 | 4 |
| 10 | 283-35927-03 | SHIM TAPPET | T=2.200 | 4 |
| 10 | 283-35928-03 | SHIM TAPPET | T=2.250 | 4 |
| 10 | 283-35929-03 | SHIM TAPPET | T=2.300 | 4 |
| 11 | 283-33601-03 | VALVE SPRING (OUTER) | | 4 |
| 12 | 283-33602-03 | VALVE SPRING (INNER) | | 4 |
| 13 | 283-37001-03 | TIMING CHAIN | | 1 |
| 14 | 283-37102-03 | CHAIN GUIDE 1 | | 1 |
| 15 | 283-37201-03 | CHAIN GUIDE 2 | | 1 |
| 16 | 283-37303-01 | LEVER COMPL. | | 1 |
| 17 | 283-36401-00 | TENSIONER ASSY. | | 1 |
| 18 | 283-36801-03 | GASKET (TENSIONER) | | 1 |
| 19 | 011-00600-10 | FLANGE BOLT | M6×8mm | 1 |
| 20 | 021-10600-20 | GASKET, ALUMINIUM | | 1 |
| 21 | 283-37401-03 | PIVOT BOLT | M8×22.5mm | 1 |
| 22 | 011-00602-40 | FLANGE BOLT | M6×25mm | 2 |

5. WATER PUMP

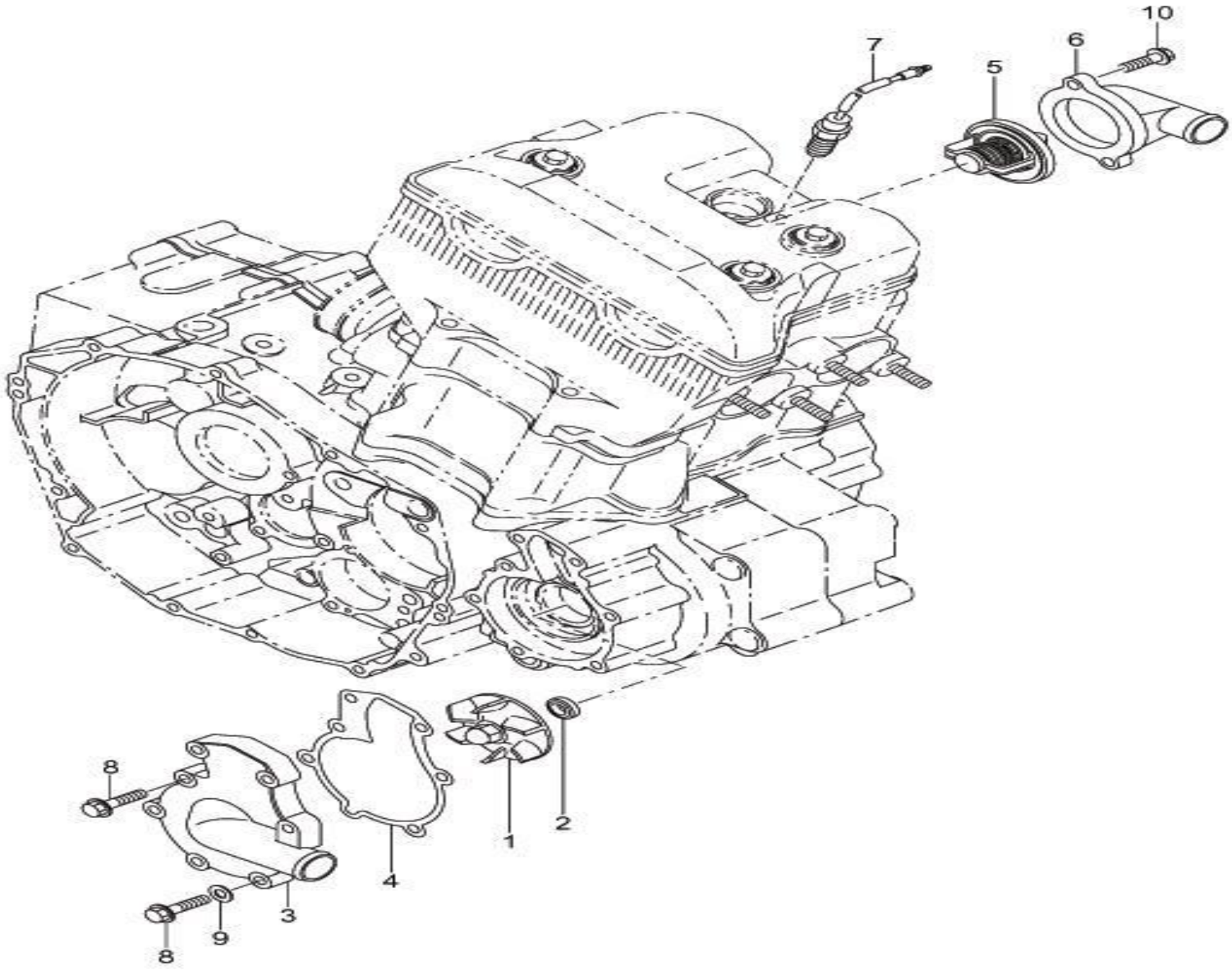

# 5. WATER PUMP

| Item | Part-No. | Part Name | Specification | Quantity |
|---|---|---|---|---|
| 1 | 283-55102-13 | IMPELLER | | 1 |
| 2 | 021-80600-10 | SEAL WASHER | | 1 |
| 3 | 290-55202-03 | WATER PUMP CASE | | 1 |
| 4 | 283-55602-13 | GASKET (WATER PUMP) | | 1 |
| 5 | 283-56101-01 | THERMO STAT COMPL. | | 1 |
| 6 | 290-55301-03 | THERMO COVER | | 1 |
| 7 | 257-56002-01 | THERMO SWITCH COMPL. | 110 DEG. | 1 |
| 8 | 011-00602-40 | FLANGE BOLT | M6×25mm | 7 |
| 9 | 021-10600-30 | GASKET, COPPER | | 1 |
| 10 | 011-00602-30 | FLANGE BOLT | M6×20mm | 2 |

6. CARBURETOR

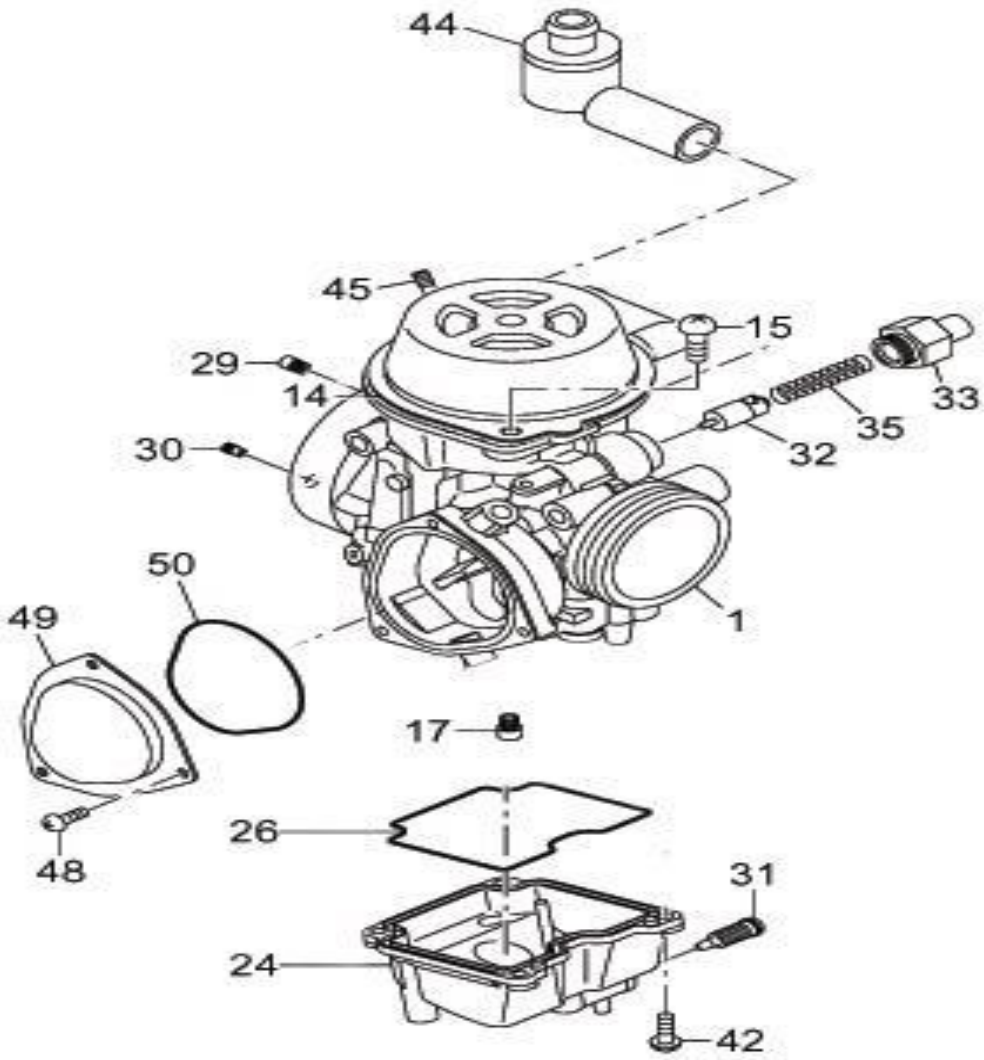

# 6. CARBURETOR

| Item | Part-No. | Part Name | Specification | Quantity |
|---|---|---|---|---|
| *1 | 283-62301-20 | CARBURETOR ASSY. | Incl. 2～50,Mark “8 | 1 |
| 14 | 283-62355-08 | DIAPHRAGM COVER | | 1 |
| 15 | 212-62361-08 | SCREW | | 2 |
| 16 | 230-62402-08 | JET(#42.5) | | 1 |
| 17 | 113-62303-08 | MAIN JET(#150) | | 1 |
| 24 | 283-62360-08 | FLOAT BODY | | 1 |
| 26 | 283-62362-08 | “O”RING | | 1 |
| 27 | 283-62500-08 | NEEDLE VALVE | | 1 |
| 28 | 283-62300-08 | NEEDLE JET | | 1 |
| 29 | 266-62409-08 | JET(#110) | | 1 |
| 30 | 283-62363-08 | JET(#120) | | 1 |
| 31 | 257-62364-08 | SCREW | | 1 |
| 32 | 257-82373-08 | PLUNGER ASSY. | | 1 |
| 33 | 283-62364-08 | GUIDE HOLDER | | 1 |
| 35 | 106-62460-08 | SPRING | | 1 |
| 42 | 283-62367-08 | SCREW | | 4 |
| 44 | 283-62368-08 | FILTER | | 1 |
| 45 | 248-62410-08 | AIR JET | | 1 |
| 48 | 226-62354-08 | SCREW | | 3 |
| 49 | 260-62365-08 | COVER | | 1 |
| 50 | 260-62364-08 | “O”RING | | 1 |

# 7. OIL PUMP

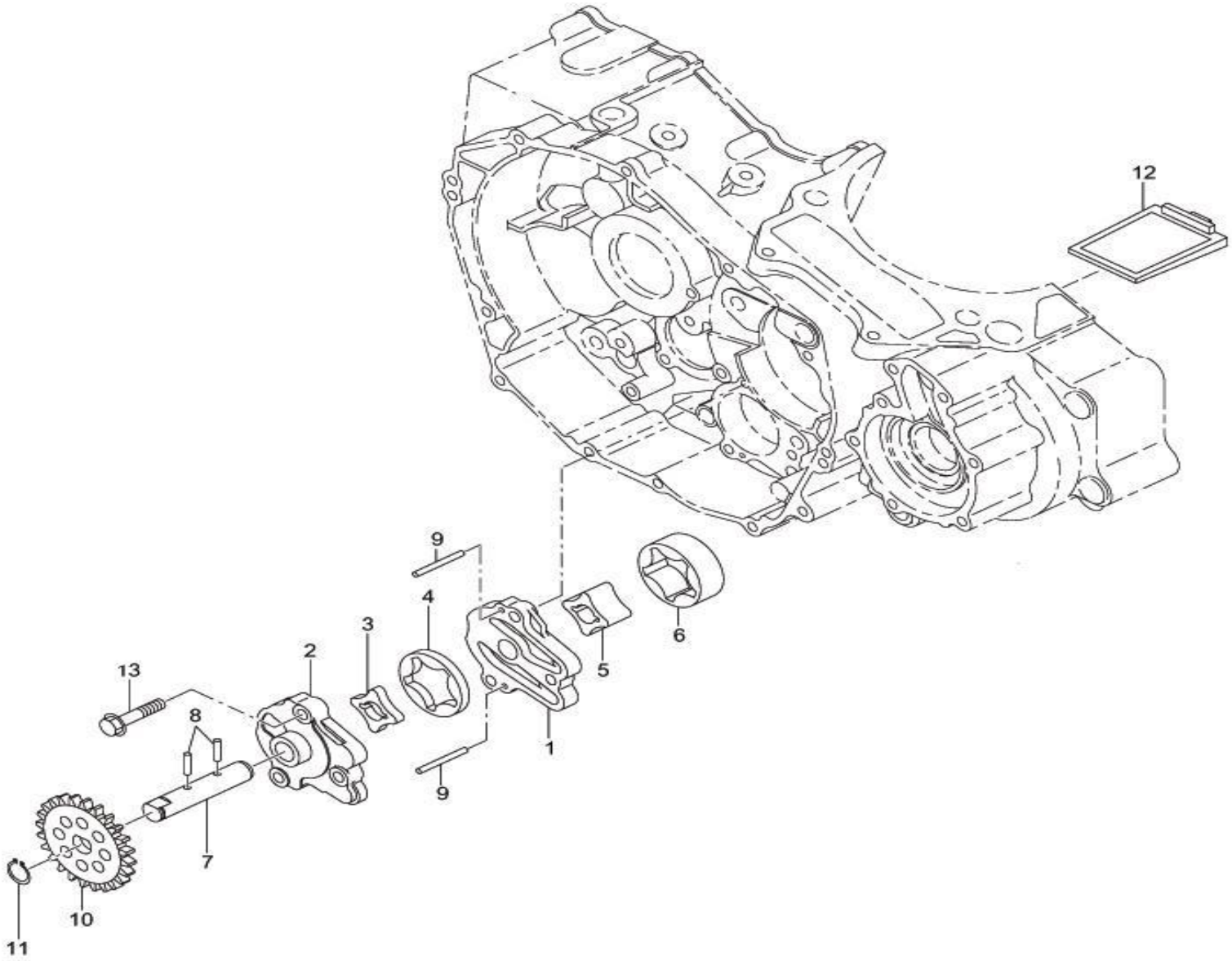

# 7. OIL PUMP

| Item | Part-No. | Part Name | Specification | Quantity |
|---|---|---|---|---|
| *1 | 283-65102-00 | OIL PUMP ASSY. | Incl. 1～9 | 1 |
| 1 | 283-65101-03 | OIL PUMP CASE 1 | | 1 |
| 2 | 283-65202-03 | OIL PUMP CASE 2 | | 1 |
| 3 | 283-66102-03 | INNER ROTOR (FEED) | | 1 |
| 4 | 283-66202-03 | OUTER ROTOR (FEED) | | 1 |
| 5 | 283-66301-03 | INNER ROTOR (SCAV) | | 1 |
| 6 | 283-66401-03 | OUTER ROTOR (SCAV) | | 1 |
| 7 | 283-65302-03 | OIL PUMP SHAFT | | 1 |
| 8 | 031-00300-30 | DOWEL PIN | | 2 |
| 9 | 031-00300-40 | DOWEL PIN | | 2 |
| 10 | 283-64104-03 | OIL PUMP GEAR | | 1 |
| 11 | 003-15120-00 | SNAP RING | | 1 |
| 12 | 283-65801-02 | OIL STRAINER UNIT | | 1 |
| 13 | 011-00604-20 | FLANGE BOLT | M6×30mm | 3 |

8. OIL FILTER

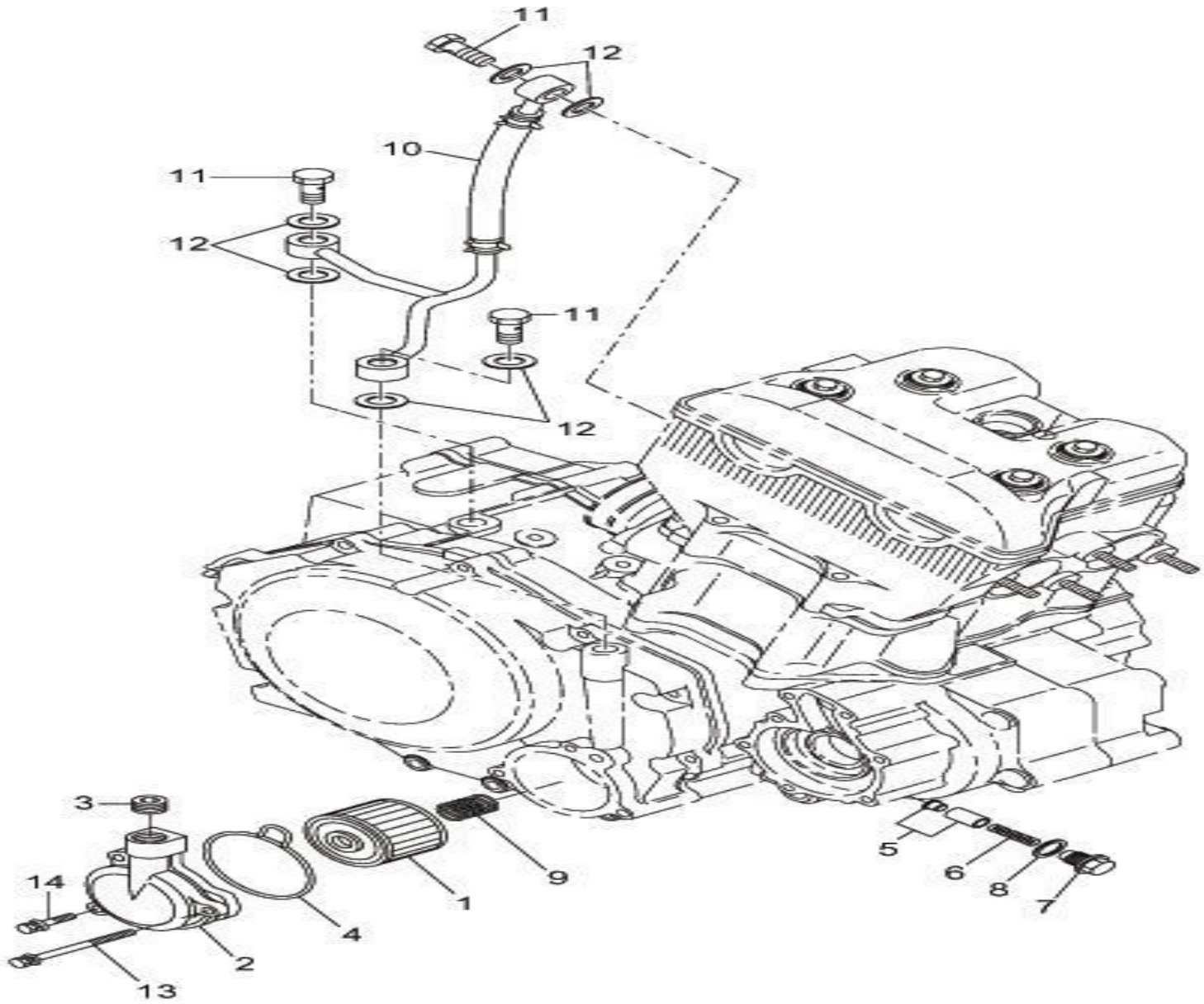

# 8. OIL FILTER

| Item | Part-No. | Part Name | Specification | Quantity |
|---|---|---|---|---|
| 1 | 283-65401-01 | OIL FILTER COMPL. | | 1 |
| *2 | 290-65501-00 | FILTER COVER ASSY. | Incl. 2,3 | 1 |
| 2 | 290-65502-01 | FILTER COVER COMPL. | | 1 |
| 3 | 040-31400-10 | PLUG | PT1/4 | 1 |
| 4 | 283-67501-03 | ”O” RING (FILTER COVER) | | 1 |
| 5 | 283-66501-00 | VALVE (ONE WAY) ASSY. | | 1 |
| 6 | 283-66601-03 | SPRING (ONE WAY VALVE) | | 1 |
| 7 | 283-66701-03 | PLUG (ONE WAY) | | 1 |
| 8 | 021-11100-10 | GASKET, ALUMINUM | | 1 |
| 9 | 283-65401-03 | SPRING (FILTER) | | 1 |
| 10 | 283-68002-00 | OIL DELIVERY PIPE ASSY. | | 1 |
| 11 | 053-01200-41 | BANJO BOLT | | 3 |
| 12 | 021-11200-50 | GASKET | | 6 |
| 13 | 011-00604-50 | FLANGE BOLT | M6×65mm | 1 |
| 14 | 011-00602-40 | FLANGE BOLT | M6×25mm | 2 |

# 9. MAGNETO

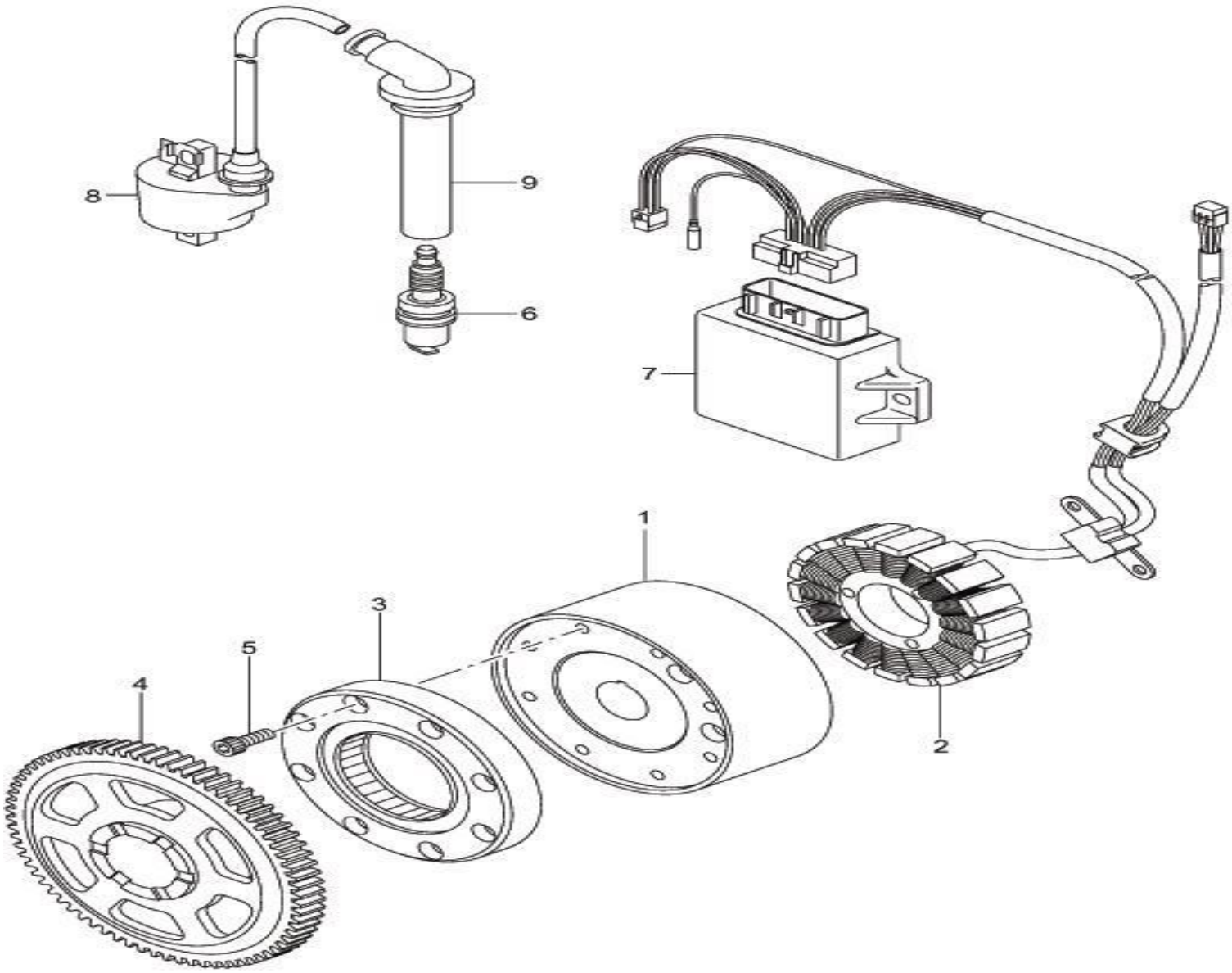

# 9. MAGNETO

| Item | Part-No. | Part Name | Specification | Quantity |
|---|---|---|---|---|
| *1 | 283-70102-10 | MAGNETO ASSY. | Incl. 1,2 | 1 |
| 1 | 283-70110-08 | FLYWHEEL ASSY | | 1 |
| 2 | 283-70210-08 | STATOR ASSY. | | 1 |
| 3 | 283-75602-00 | ONE WAY CLUTCH ASSY. | | 1 |
| 4 | 283-75501-03 | STARTER GEAR | | 1 |
| 5 | 011-90600-80 | BOLT (SOCKET HEAD) | M6×16mm | 8 |
| 6 | 065-01407-60 | SPARK PLUG | DCPR8E | 1 |
| 7 | 283-72202-01 | CDI SYSTEM COMPL. | | 1 |
| 8 | 283-71201-01 | IGNITION COIL COMPL. | | 1 |
| 9 | 283-76301-03 | SPARK PLUG CAP | | 1 |

10. MAG COVER

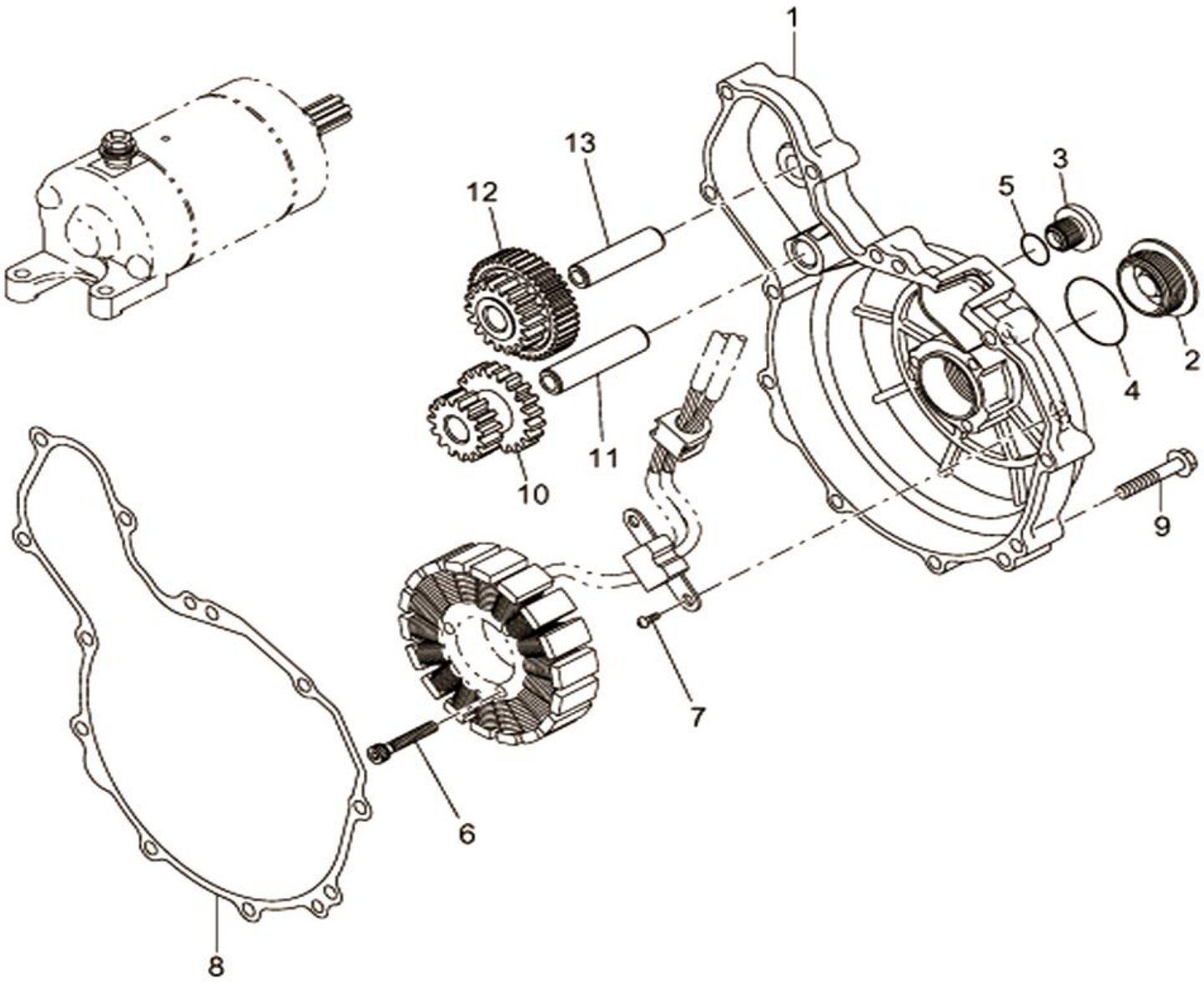

# 10. MAG COVER

| Item | Part-No. | Part Name | Specification | Quantity |
|---|---|---|---|---|
| 1 | 290-71701-01 | MAG COVER COMPL. | | 1 |
| 2 | 283-77101-03 | PLUG 1 (MAG COVER) | | 1 |
| 3 | 283-77201-03 | PLUG 2 (MAG COVER) | | 1 |
| 4 | 024-02700-40 | ″O″ RING | P29-28.7x2.4 | 1 |
| 5 | 024-01200-10 | ″O″ RING | 12.3X2.4 | 1 |
| 6 | 011-90500-40 | BOLT (SOCKET HEAD) | M5×30mm | 3 |
| 7 | 004-35051-20 | SCREW AND WASHER ASSY. | M5×12mm | 2 |
| 8 | 283-75001-13 | GASKET (MAG COVER) | | 1 |
| 9 | 011-00604-30 | FLANGE BOLT | M6×35mm | 11 |
| 10 | 283-75101-03 | REDUCTION GEAR 1 | | 1 |
| 11 | 283-75201-03 | SHAFT 1 | | 1 |
| 12 | 283-75301-03 | REDUCTION GEAR 2 | | 1 |
| 13 | 283-75401-03 | SHAFT 2 | | 1 |

# 11. STARTING MOTOR

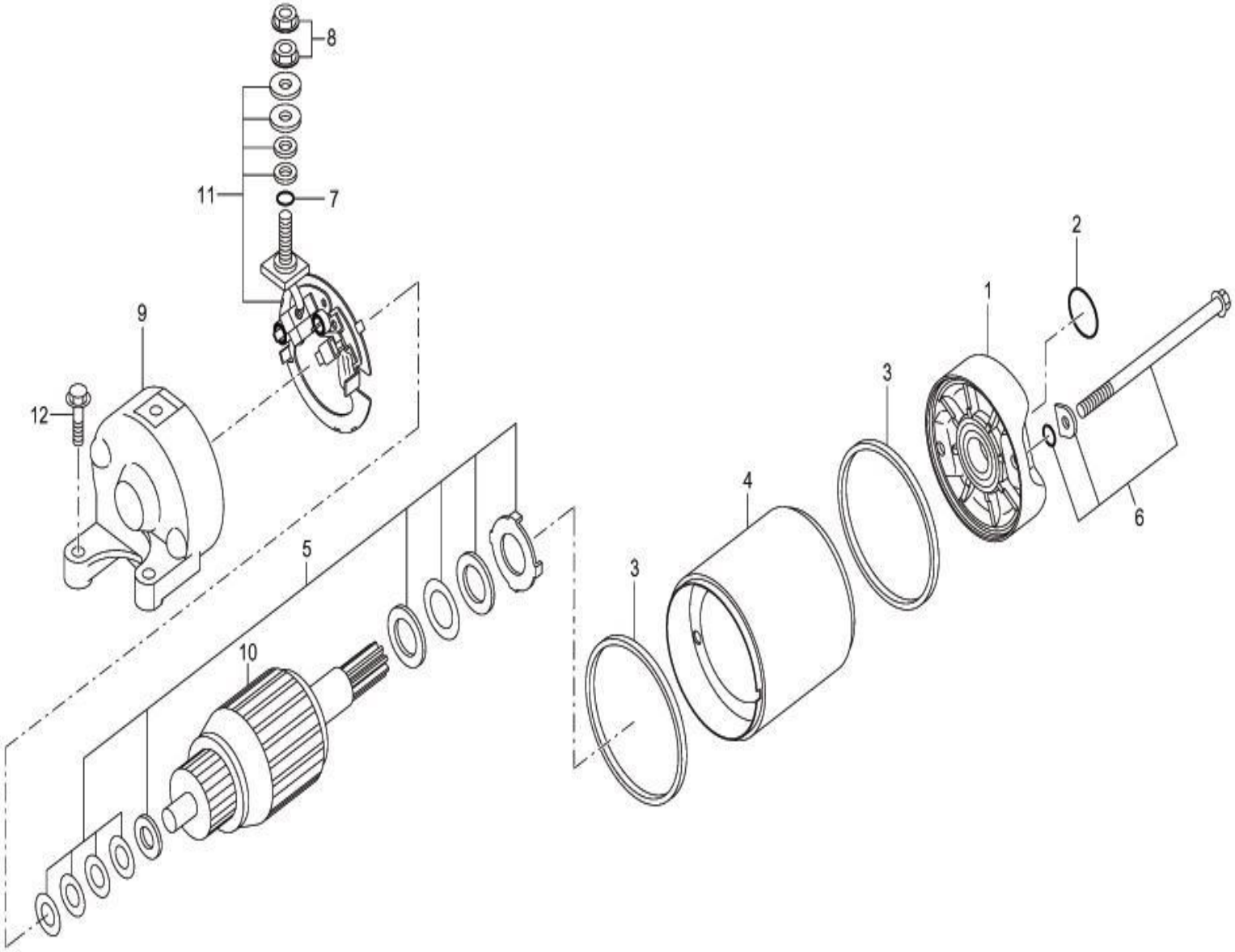

# 11. STARTING MOTOR

| Item | Part-No. | Part Name | Specification | Quantity |
|---|---|---|---|---|
| *1 | 283-70501-00 | STARTING MOTOR ASSY. | Incl. 1～11 | 1 |
| *1 | 257-70501-08 | FRONT BRACKET ASSY. | Incl. 2 | 1 |
| 2 | 164-70553-08 | “O”RING | | 1 |
| 3 | 155-70572-08 | RUBBER RING | | 2 |
| 5 | 257-70550-08 | WASHER SET | | 1 |
| 6 | 257-70551-08 | SET BOLT ASSY. | | 2 |
| 7 | 155-70575-08 | “O”RING | | 3 |
| 8 | 155-70554-08 | FLANGE NUT | | 1 |
| 9 | 283-70505-08 | REAR BRACKET ASSY. | | 1 |
| 10 | 257-70552-08 | ARMATURE ASSY. | | 1 |
| 11 | 155-70573-08 | CARBON BRUSH SET | | 1 |
| 12 | 011-00602-40 | FLANGE BOLT | M6×25mm | 2 |

12. CLUTCH (No.1)

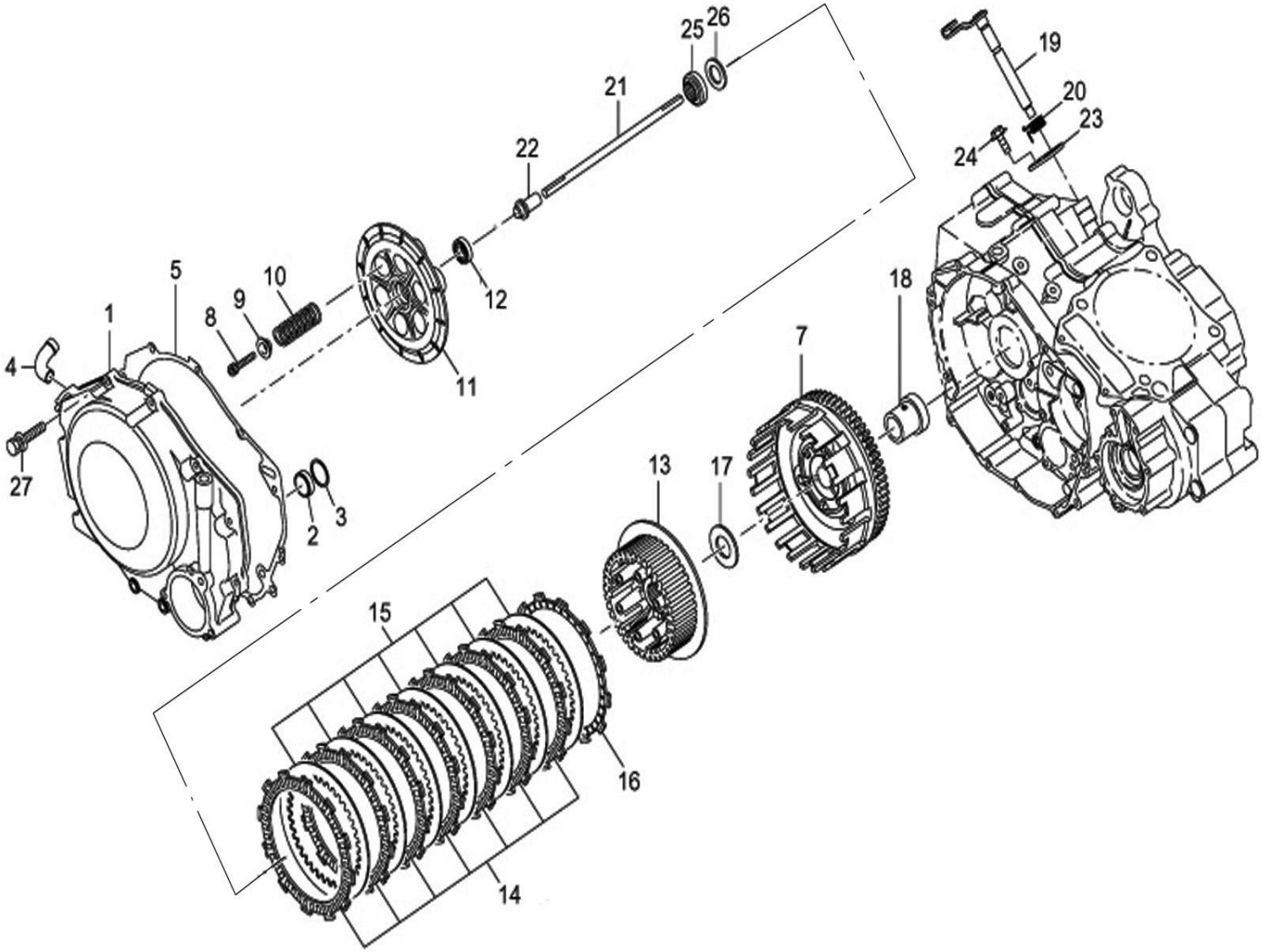

## 12. CLUTCH (No.1)

| Item | Part-No. | Part Name | Specification | Quantity |
|---|---|---|---|---|
| *1 | 290-85002-11 | CLUTCH COVER COMPL. | Incl. 2～4 | 1 |
| 2 | 283-85101-03 | OIL SEAL (CRANK) | | 1 |
| 3 | 003-14260-00 | SNAP RING, INNER | | 1 |
| 4 | 271-38201-01 | PIPE COMPL. | | 1 |
| 5 | 283-85302-03 | GASKET (CLUTCH COVER) | | 1 |
| *6 | 283-83903-00 | CLUTCH ASSY. (MULTI) | Incl. 7～17 | 1 |
| 7 | 283-83914-08 | OUTER COMPL.,CLUTCH | | 1 |
| 8 | 283-83903-08 | BOLT | M6×35mm | 6 |
| 9 | 283-83905-08 | WASHER, CLUTCH SPRING | | 6 |
| 10 | 283-83904-08 | SPRING (CLUTCH) | | 6 |
| 11 | 283-83909-08 | DISK, CLUTCH PRESSURE | | 1 |
| 12 | 283-83910-08 | BALL BEARING | | 1 |
| 13 | 283-83902-08 | CENTER COMPL.,CLUTCH | | 1 |
| 14 | 283-83915-08 | DISK A, CLUTCH FRICTION | | 7 |
| 15 | 283-83908-08 | PLATE, CLUTCH | | 7 |
| 16 | 283-83907-08 | DISK B, CLUTCH FRICTION | | 1 |
| 17 | 283-83913-08 | WASHER,THRUST | | 1 |
| 18 | 283-85502-03 | DISTANCE COLLAR | | 1 |
| 19 | 283-85601-01 | RELEASE SHAFT COMPL. | | 1 |
| 20 | 283-85701-03 | SPRING (RELEASE) | | 1 |
| 21 | 283-85802-03 | PUSH ROD | | 1 |
| 22 | 283-85901-03 | PUSHER | | 1 |
| 23 | 283-86102-03 | PLATE (RELEASE SHAFT) | | 1 |
| 26 | 980-35180-20 | LOCK WASHER | | 1 |
| 27 | 011-00602-40 | FLANGE BOLT | M6×25mm | 11 |

# 13. CLUTCH (No.2)

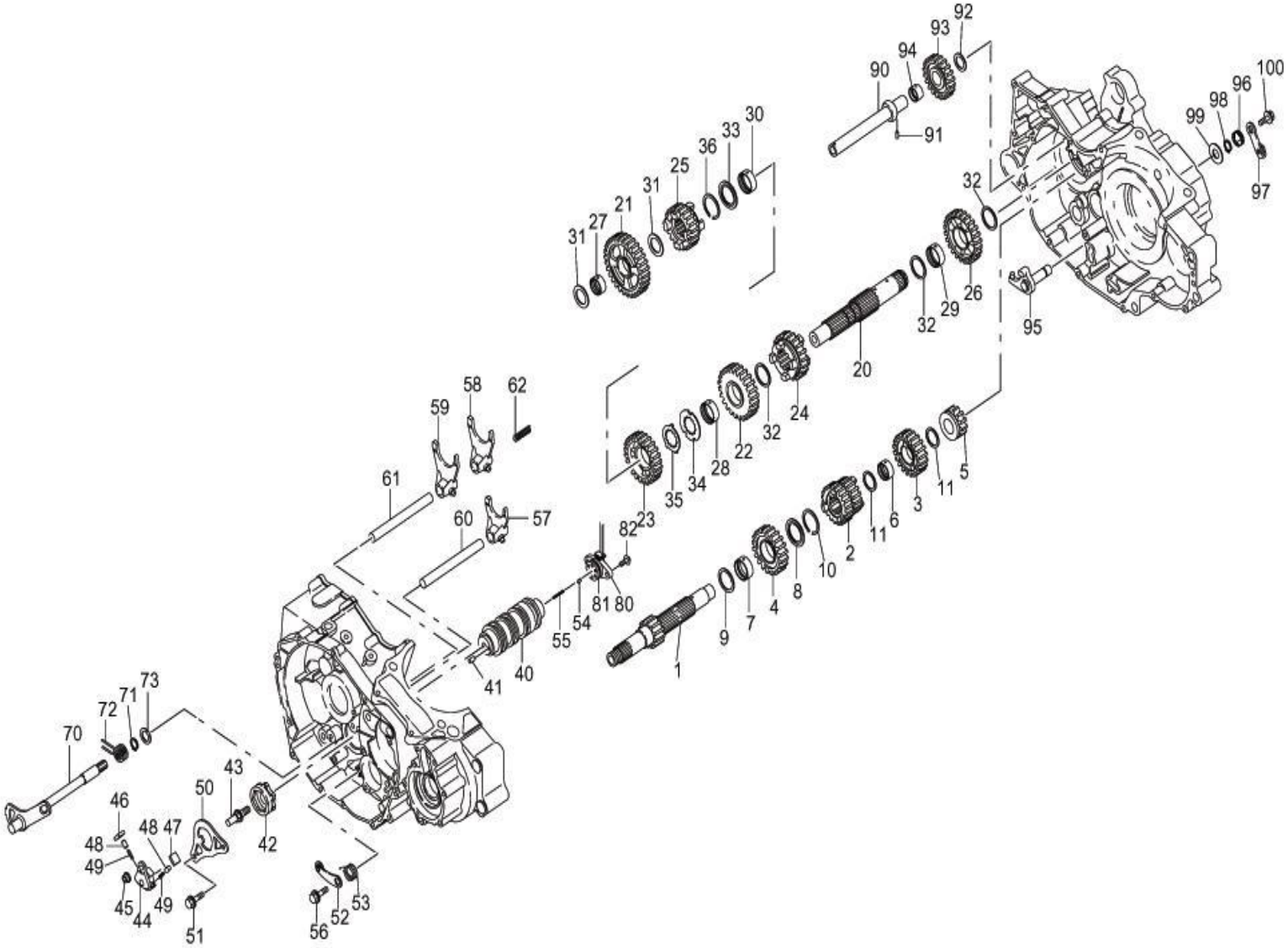

## 13. CLUTCH (No.2)

| Item | Part-No. | Part Name | Specification | Quantity |
|---|---|---|---|---|
| *1 | 283-86202-00 | MAIN SHAFT ASSY. | Incl. 1～11 | 1 |
| 1 | 283-86202-01 | MAIN SHAFT COMPL. | | 1 |
| 2 | 283-82208-03 | GEAR (2ND,3RD DRIVE) | | 1 |
| 3 | 283-82212-03 | GEAR (4TH DRIVE) | | 1 |
| 4 | 283-82213-03 | GEAR (5TH DRIVE) | | 1 |
| 5 | 283-82211-03 | REVERSE GEAR (DRIVE) | | 1 |
| 6 | 283-86406-03 | COLLAR | | 1 |
| 7 | 283-86405-03 | COLLAR | | 1 |
| 8 | 283-86701-03 | SPLINE WASHER | | 1 |
| 9 | 283-86802-03 | WASHER | | 1 |
| 10 | 283-86901-03 | CLIP | | 1 |
| 11 | 283-86804-03 | WASHER | | 2 |
| *20 | 283-87002-00 | COUNTER SHAFT ASSY. | Incl. 20～36 | 1 |
| 20 | 283-87002-01 | COUNTER SHAFT COMPL. | | 1 |
| 21 | 283-82106-03 | GEAR (1ST DRIVEN) | | 1 |
| 22 | 283-82107-03 | GEAR (2ND DRIVEN) | | 1 |
| 23 | 283-82108-03 | GEAR (3RD DRIVEN) | | 1 |
| 24 | 283-82109-03 | GEAR (4TH DRIVEN) | | 1 |
| 25 | 283-82110-03 | GEAR (5TH DRIVEN) | | 1 |
| 26 | 283-82111-03 | REVERSE GEAR (DRIVEN) | | 1 |
| 27 | 283-86403-03 | COLLAR | | 1 |
| 28 | 283-86409-03 | COLLAR | | 1 |
| 29 | 283-86405-03 | COLLAR | | 1 |

# 13. CLUTCH (No.2)

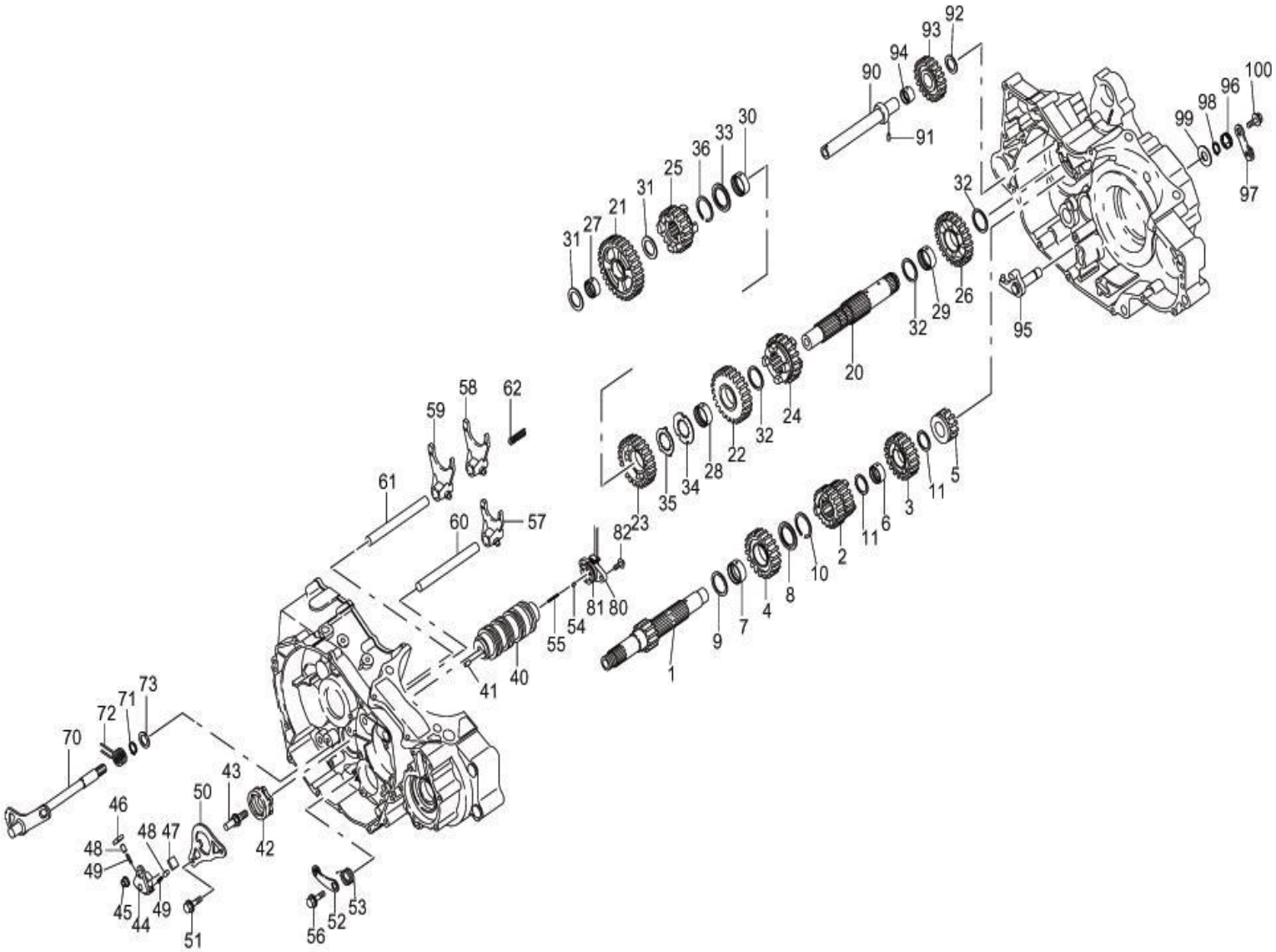

## 13. CLUTCH (No.2)

| Item | Part-No. | Part Name | Specification | Quantity |
|---|---|---|---|---|
| 30 | 283-86407-03 | COLLAR (SPLINE) | | 1 |
| 31 | 283-86803-03 | WASHER | | 2 |
| 32 | 283-87402-03 | WASHER | | 3 |
| 33 | 283-86701-03 | SPLINE WASHER | | 1 |
| 34 | 283-86801-03 | WASHER | | 1 |
| 35 | 283-86702-03 | LOCK WASHER | | 1 |
| 36 | 283-86901-03 | CLIP | | 1 |
| *40 | 283-87602-01 | SHIFT DRUM COMPL. | Incl. 41 | 1 |
| 41 | 283-87801-03 | DOWEL PIN | | 1 |
| 42 | 283-87702-03 | SHIFT CAM | | 1 |
| 43 | 283-8B001-03 | SHIFTER PIN | | 1 |
| 44 | 283-8B102-03 | DRUM SHIFTER | | 1 |
| 45 | 283-8B201-03 | SHIFTER COLLAR | | 1 |
| 46 | 283-8B301-03 | RATCHET PAWL A | | 1 |
| 47 | 283-8B401-03 | RATCHET PAWL B | | 1 |
| 48 | 283-8B501-03 | PAWL PLUNGER | | 2 |
| 49 | 283-8B601-03 | SPRING (PLUNGER) | | 2 |
| 50 | 283-8B701-03 | GUIDE PLATE | | 1 |
| 51 | 011-00604-70 | FLANGE BOLT | M6×20mm | 2 |
| 52 | 283-8C301-01 | STOPPER ARM COMPL. | | 1 |
| 53 | 283-88005-13 | SPRING (STOPPER) | | 1 |
| 54 | 283-88101-03 | POINT (NEUTRAL) | | 1 |
| 55 | 283-88201-03 | SPRING (POINT) | | 1 |

# 13. CLUTCH (No.2)

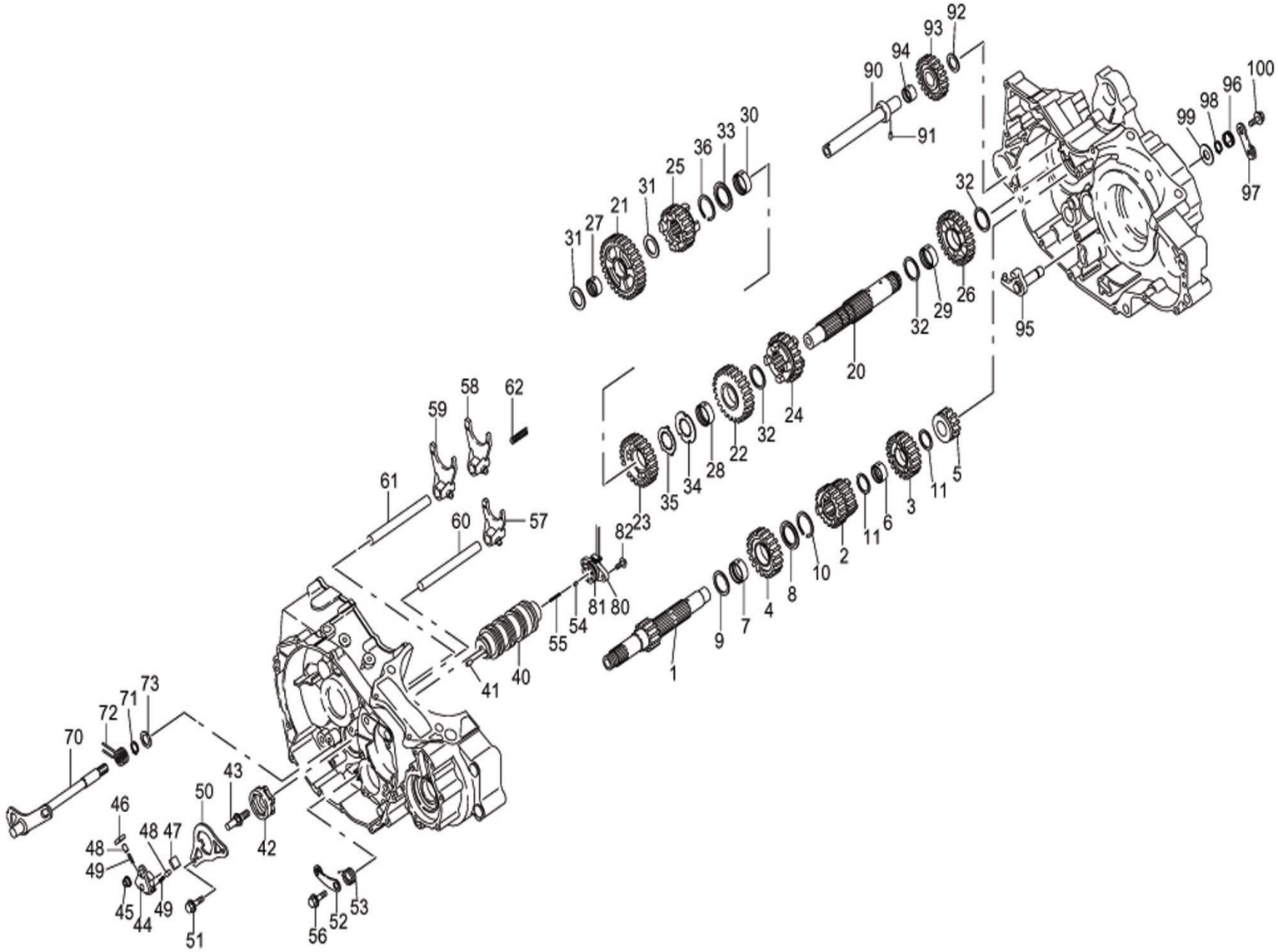

## 13. CLUTCH (No.2)

| Item | Part-No. | Part Name | Specification | Quantity |
|---|---|---|---|---|
| 56 | 283-89906-03 | BOLT (STOPPER) | | 1 |
| 57 | 283-88410-03 | SHIFT FORK (MAIN) | | 1 |
| 58 | 283-88411-03 | SHIFT FORK (LEFT) | | 1 |
| 59 | 283-88412-03 | SHIFT FORK (RIGHT) | | 1 |
| 60 | 283-88505-03 | FORK SHAFT | | 1 |
| 61 | 283-88506-03 | FORK SHAFT | | 1 |
| 62 | 283-88601-03 | SPRING (FORKSHAFT) | | 1 |
| 70 | 283-8C002-01 | SHIFT SHAFT COMPL. | Incl. 71,72 | 1 |
| 71 | 283-86902-03 | SNAP RING | | 1 |
| 72 | 283-8C201-03 | RETURN SPRING | | 1 |
| 73 | 283-86807-03 | WASHER | | 1 |
| *80 | 283-89304-00 | SWITCH (POSITION) ASSY. | Incl. 81 | 1 |
| 81 | 024-02100-10 | ″O″ RING | | 1 |
| 82 | 013-10500-30 | SCREW AND WASHER ASSY. | M5×20mm | 2 |
| *90 | 283-8A001-01 | REVERSE SHAFT COMPL. | Incl. 91～94 | 1 |
| 91 | 283-87801-03 | DOWEL PIN | | 1 |
| 92 | 283-86805-03 | WASHER | | 1 |
| 93 | 283-8A101-03 | REVERSE IDELE GEAR | | 1 |
| 94 | 283-86408-03 | COLLAR | | 1 |
| 95 | 283-8A201-01 | REVERSE ARM COMPL. | | 1 |
| 96 | 283-8A401-03 | REVERSE ARM SPRING | | 1 |
| 97 | 283-8A301-03 | REVERSE ARM LEVER | | 1 |
| 98 | 003-15120-00 | SNAP RING | | 1 |
| 99 | 283-86806-03 | WASHER | | 1 |
| 100 | 011-00604-40 | FLANGE BOLT | M6×12mm | 1 |

14. COVER(CHAIN)

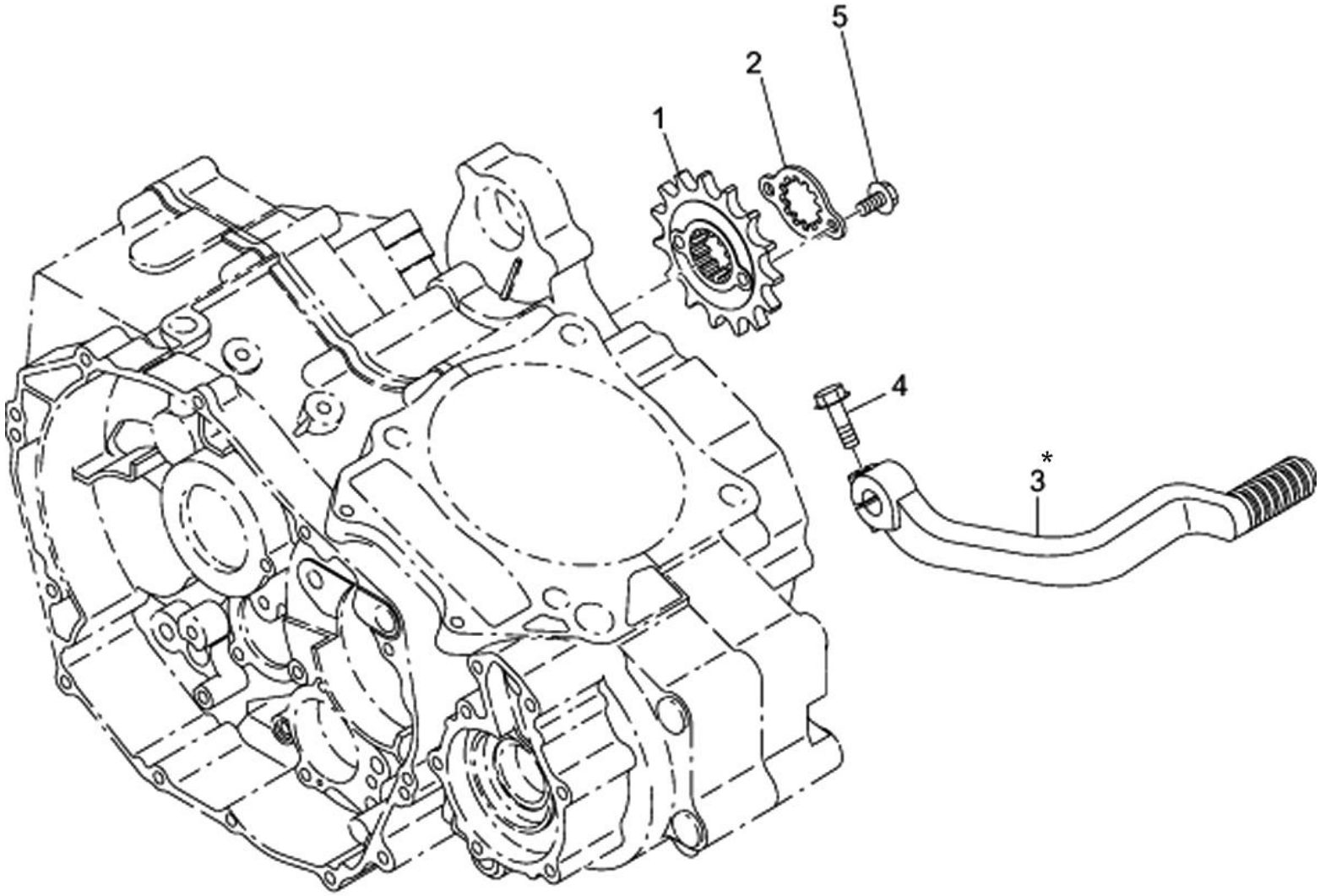

## 14. COVER(CHAIN)

| Item | Part-No. | Part Name | Specification | Quantity |
|---|---|---|---|---|
| 1 | 283-89603-03 | SPROCKET 14T | | 1 |
| 2 | 283-89702-03 | FIXING PLATE | | 1 |
| 3 | 283-89802-01 | SHIFT PEDAL COMPL. | | 1 |
| 4 | 011-00602-40 | FLANGE BOLT | M6×25mm | 1 |
| 5 | 011-00604-40 | FLANGE BOLT | M6×12mm | 2 |